ARISTON

SPARE PARTS EXPLODED VIEW
GAS WALL BOILERS

Model

MICROGENUS PLUS

R8215237-05 - 29/05/2012

EN	FR	IT	ES	DE

MICROGENUS PLUS

Domestic Gas Boilers

Col	Reference	Model type	Begin	End
1	537269	MICROGENUS PLUS 24 MFFI (FR/BE) met.	02-2003	01-2008
1	537270	MICROGENUS PLUS 24 MFFI (FR/BE) GPL	02-2003	01-2008
2	3300101	MICROGENUS PLUS SYSTEM 24 RFFI (FR)	02-2006	04-2006
2	3300096	MICROGENUS PLUS SYSTEM 24 RFFI NAT	12-2005	08-2007
3	537271	MICROGENUS PLUS 24 MI (FR/BE) met.	02-2003	01-2008
3	537272	MICROGENUS PLUS 24 MI (FR/BE) GPL	02-2003	01-2008
4	537671	MICROGENUS PLUS 24 MI VMC (FR/BE) MET	07-2003	01-2008
5	3300100	MICROGENUS PLUS SYSTEM 24 RI (FR)	02-2006	04-2006
5	3300095	MICROGENUS PLUS SYSTEM 24 RI NAT	12-2005	08-2007
6	537273	MICROGENUS PLUS 28 MFFI (FR/BE) met.	02-2003	01-2008
6	537274	MICROGENUS PLUS 28 MFFI (FR/BE) GPL	02-2003	01-2008
7	537276	MICROGENUS PLUS 28 MI (FR/BE) GPL	02-2003	01-2004
7	537275	MICROGENUS PLUS 28 MI (FR/BE) met.	02-2003	01-2004
8	537277	MICROGENUS PLUS 31 MFFI (FR/BE) met.	02-2003	02-2008
8	537278	MICROGENUS PLUS 31 MFFI (FR/BE) GPL	02-2003	01-2008

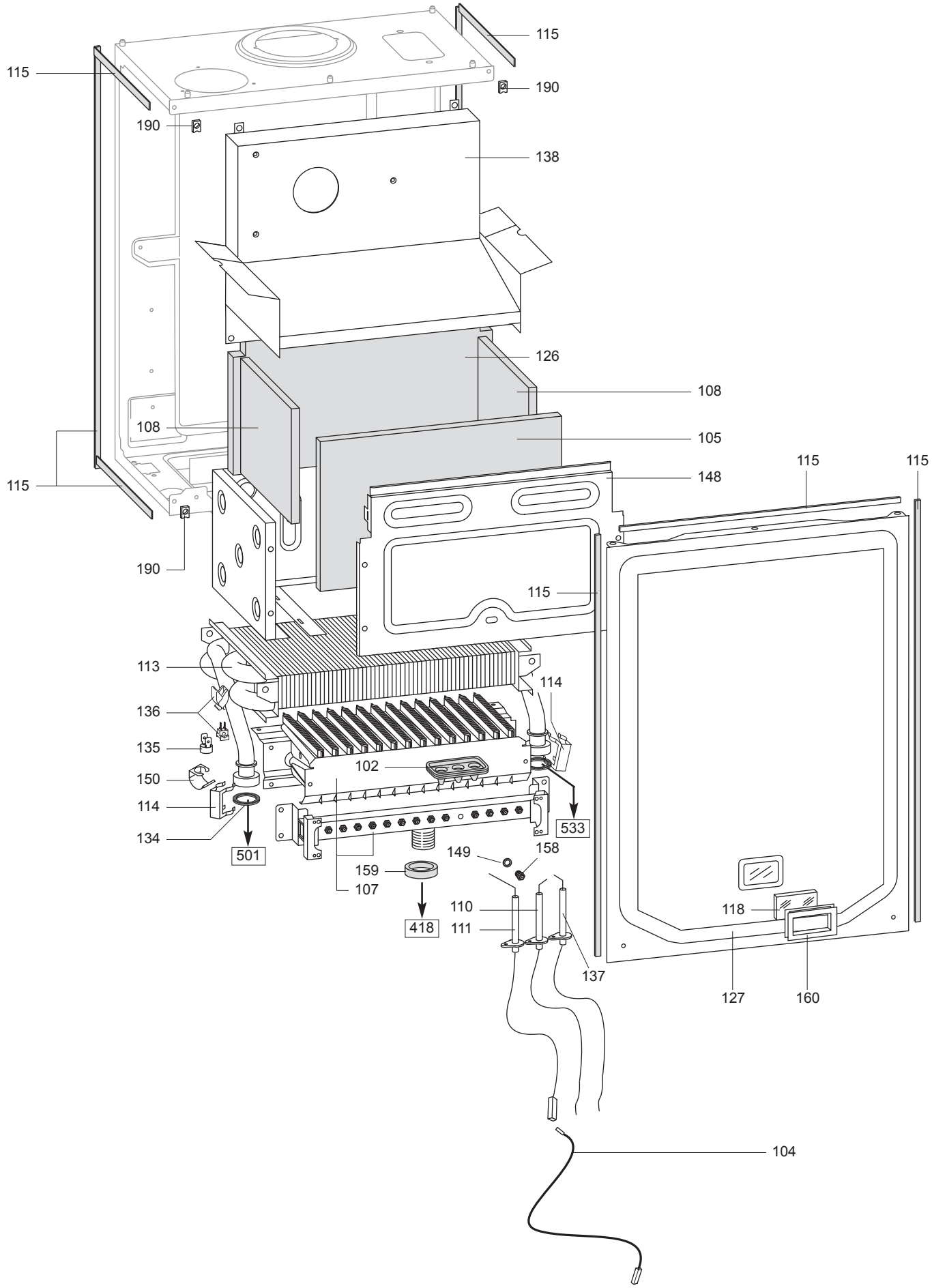
115
115
190
190
138
126
108
108
105
115
148
115
115
190
115
113
114
136
135
102
150
114
533
134
501
149
158
159
107
110
118
418
111
137
127
160
104

R8220388

	Description	Manf. Pt. N	Type	1 MICROG. PLUS 24 MFFI	2 MICROG. PLUS 24 RFFI	3 MICROG. PLUS 24 MI	4 MICROG. PLUS 24 MI VMC	5 MICROG. PLUS 24 RI	6 MICROG. PLUS 28 MFFI	7 MICROG. PLUS 28 MI	8 MICROG. PLUS 31 MFFI	9	10	11	12	13	14	15	16	17	18	31	
0100	**SEALED CASE**																						
0102	IGNITION ELECTRODE CABLE RUBBER	998147		●	●				●		●												
0104	CABLE (DETECTION)	996119		●	●				●		●												
0105	PANEL (INSULATION - FRONT)	65100530		●	●				●		●												
0107	BURNER	65103307	LG						●														
	BURNER	65103310	LG	●																			
	BURNER	65103431	LG								●												
	BURNER	65103230	NG								●												
	BURNER	65103277	NG	●	●																		
	BURNER	65103278	NG						●														
0108	PANEL (INSULATION - SIDE)	992199		●	●				●		●												
0110	ELECTRODE (IGNITION L.H.)	65100694		●	●				●		●												
0111	ELECTRODE (DETECTION)	65100692		●	●				●		●												
0113	HEAT EXCHANGER	61010017		●	●																		
	HEAT EXCHANGER	61011136							●		●												
0114	CLIP	61010609		●	●				●		●												
0115	GASKET (ADHESIVE - 14X6 MM)	65102772		●	●				●		●												
	GASKET (ADHESIVE - 14X6 MM)	65102772			●																	08/05	
0126	PANEL (INSULATION - REAR)	65100531		●	●				●		●												
0127	PANEL (FRONT - SEALED CHAMBER)	65105370		●	●				●		●												
0134	GASKET 3/4	573520			●																		
0135	OVERHEAT THERMOSTAT	996065		●	●				●		●												
0136	TEMPERATURE PROBE + CLIP	990686		●	●				●		●												
0137	ELECTRODE (IGNITION R.H.)	65100693		●	●				●		●												
0138	FLUE HOOD	65101270		●	●				●		●												
0148	FRONT PANEL	65100524		●	●				●		●												
0149	BURNER JET WASHER	572138		●	●				●		●												
0150	CLIP	61010050		●	●				●		●												
0158	BURNER JET (L.P.G. 0.72)	570251	LG	●																			
	BURNER JET (L.P.G. 0.80)	65100740	LG								●												
	BURNER JET (L.P.G. 0.77)	998434	LG						●														
	BURNER JET (NG 1.25)	570248	NG	●	●																		
	BURNER JET (NG 1.35)	65100772	NG								●												
	BURNER JET (NG 1.30)	998433	NG						●														
0159	SILICONE SEAL	569443		●	●				●		●												
0190	SPRING (FASTENING)	570717		●	●				●		●												
0191	SIGHT GLASS - GASKET	65105371		●	●				●		●												

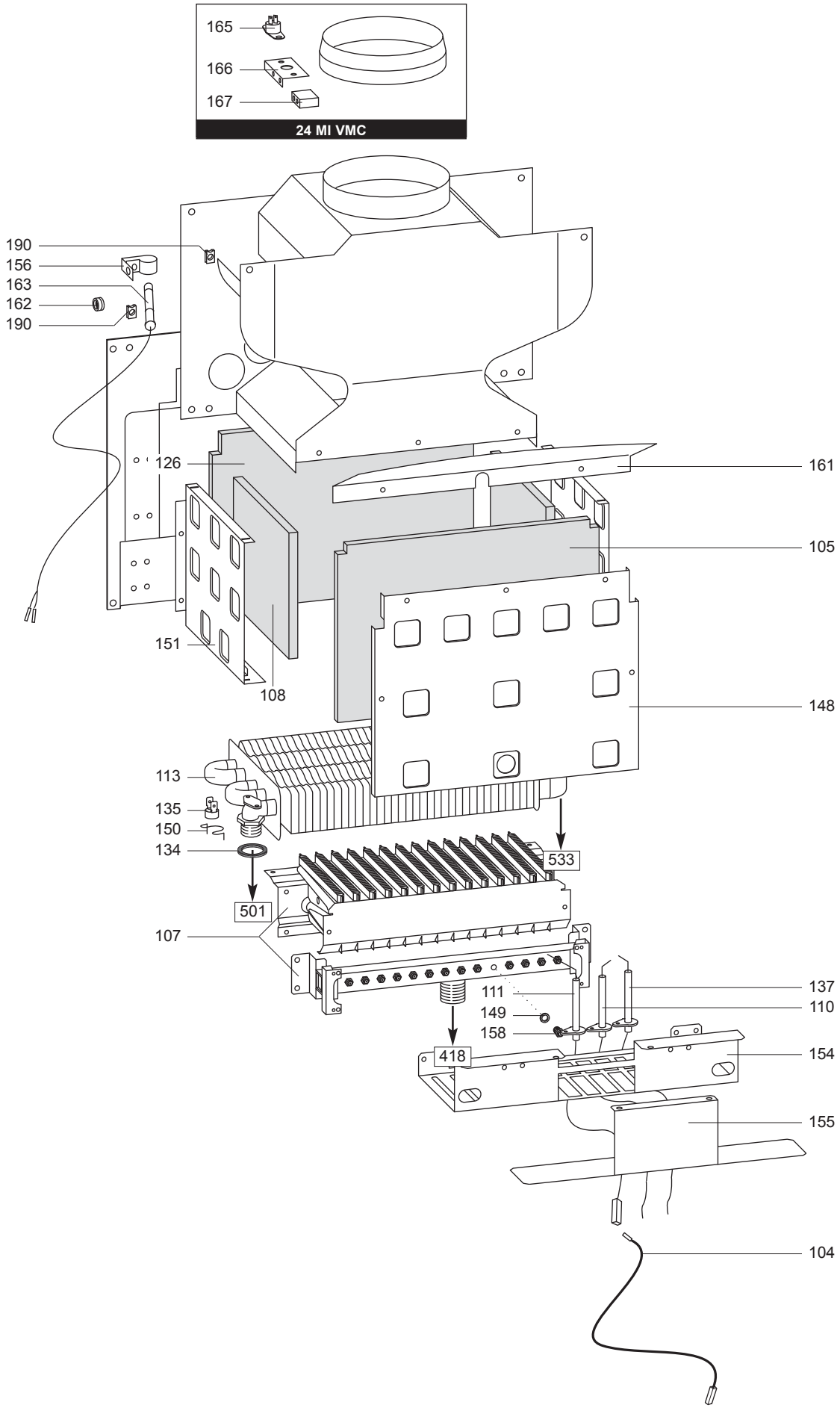
165
166
167
24 MI VMC
190
156
163
162
190
126
161
105
151
108
148
113
135
150
134
533
501
107
111
149
158
137
110
418
154
155
104

	Description	Manf. Pt. N	Type	1 MICROG. PLUS 24 MFFI	2 MICROG. PLUS 24 RFFI	3 MICROG. PLUS 24 MI	4 MICROG. PLUS 24 MI VMC	5 MICROG. PLUS 24 RI	6 MICROG. PLUS 28 MFFI	7 MICROG. PLUS 28 MI	8 MICROG. PLUS 31 MFFI	9	10	11	12	13	14	15	16	17	18	31	
0100	**SEALED CASE**																						
0104	CABLE (DETECTION)	996119				●	●	●		●													
0105	PANEL (INSULATION - FRONT)	995952				●	●	●		●													
0107	BURNER	999404	LG			●				●													
	BURNER	998887	NG			●	●	●		●													
0108	PANEL (INSULATION - SIDE)	998639				●	●	●		●													
0110	ELECTRODE (IGNITION L.H.)	65100250				●	●	●		●													
0111	ELECTRODE (DETECTION)	998624				●	●	●		●													
0113	MAIN EXCHANGER	999152				●	●	●		●													
0126	PANEL (INSULATION - REAR)	996161				●	●	●		●													
0134	GASKET 3/4	573520				●	●	●		●													
0135	THERMOSTAT	65102230				●	●	●		●												04/05	
	OVERHEAT THERMOSTAT	996065				●	●			●													03/05
0137	ELECTRODE (IGNITION R.H.)	65100251				●	●	●		●													
0148	FRONT PANEL	995921				●	●	●		●													
0149	BURNER JET WASHER	572138				●	●	●		●													
0150	FIXING SPRING (OVERHEAT THERM.)	998583				●	●	●		●													
0151	PANEL (L.H. SIDE)	995922				●	●	●		●													
0154	PROTECTION SCREEN	65101420				●	●	●		●													
0155	AIR BAFFLE PLATE	65101421				●	●	●		●													
0156	SPRING (FLUE CONTROL PROBE)	573349				●	●	●		●													
0158	BURNER JET (L.P.G. 0.77)	998434	LG			●				●													
	BURNER JET (NG 1.30)	998433	NG			●	●	●		●													
0161	PLATE (FRONTAL)	995312				●	●			●													
0162	CABLE HOLDER	573510				●	●	●		●													
0163	CABLE (FLUE CONTROL PROBE)	995309				●	●	●		●													
0165	TEMPERATURE PROBE	65102903					●																
0166	FUME PROBE BRACKET	996098					●																
0167	TEFLON SPACER	65102749					●																
0190	SPRING (FASTENING)	570717				●	●	●		●													

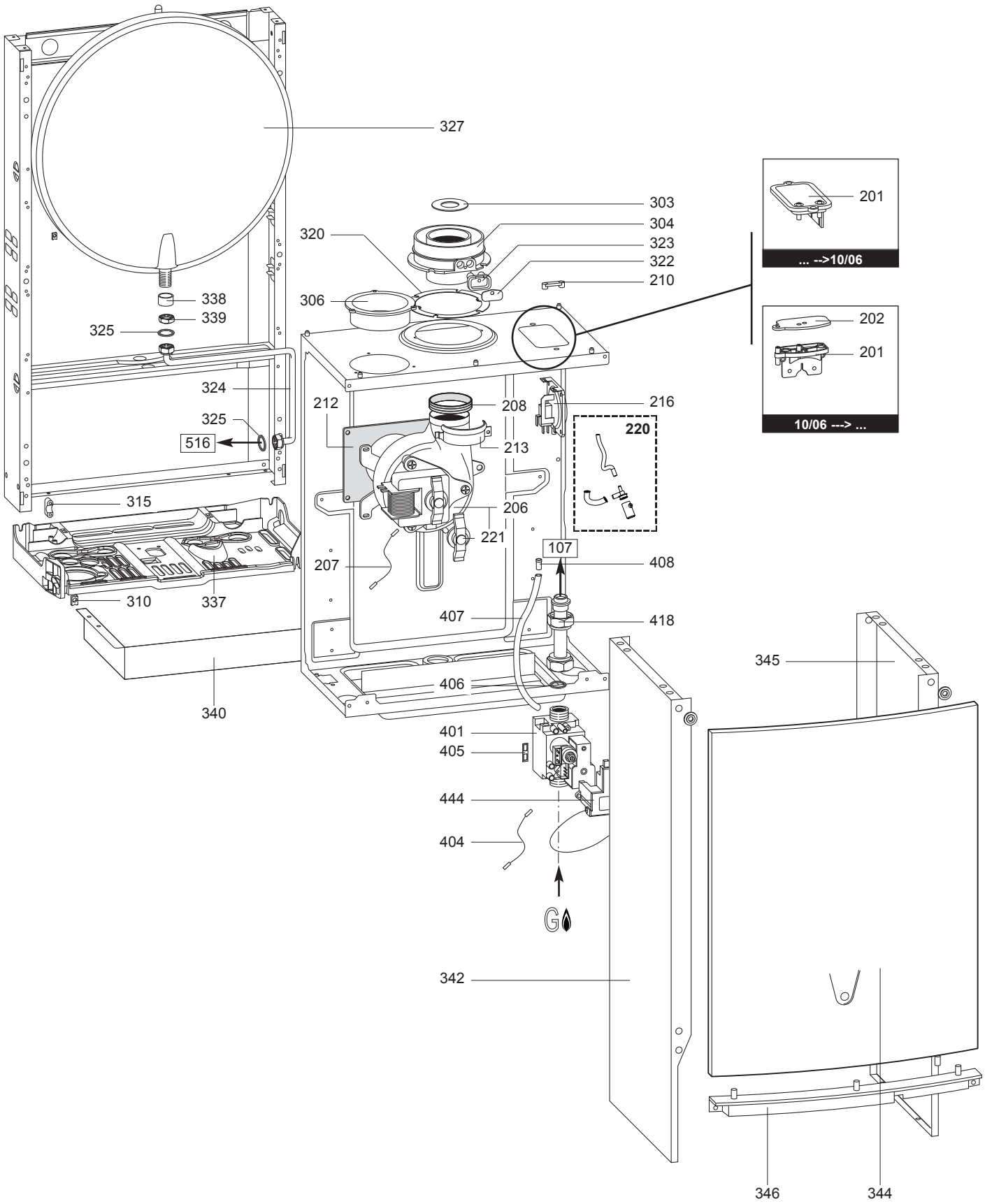
327
303
304
323
322
210
320
306
338
339
325
324
325
516
212
208
216
213
220
206
221
315
107
408
207
310
337
407
418
340
406
345
401
405
444
404
342
346
344
201
... -->10/06
202
201
10/06 ---> ...

	Description	Manf. Pt. N	Type	1 MICROG. PLUS 24 MFFI	2 MICROG. PLUS 24 RFFI	3 MICROG. PLUS 24 MI	4 MICROG. PLUS 24 MI VMC	5 MICROG. PLUS 24 RI	6 MICROG. PLUS 28 MFFI	7 MICROG. PLUS 28 MI	8 MICROG. PLUS 31 MFFI	9	10	11	12	13	14	15	16	17	18	31	
0200	**FAN ASSEMBLY**																						
0201	SUPPORT PLATE	990373		●	●				●		●											10/06	
	SUPPORT PLATE	997203		●	●				●		●												09/06
	SUPPORT PLATE	997203			●																		
0202	GASKET (AIR PRESSURE SWITCH)	65101317		●	●				●		●											10/06	
0206	FAN	65100691		●					●														
	FAN	65100719									●												
	FAN	999397			●																		
0207	EARTH CABLE (FAN)	65101271		●	●				●		●												
0208	GASKET (FAN)	65100707		●	●				●		●												
0210	AIR INTAKE COVER	573329		●	●				●		●												
0212	PANEL (INSULATION - FAN)	999135		●	●				●		●												
0213	FIXING CLAMP (FAN)	998566		●	●				●		●												
0216	AIR PRESSURE SWITCH	65100716							●		●												
	AIR PRESSURE SWITCH 40 Pa	65102164-01		●	●																	11/04	
	AIR PRESSURE SWITCH 55 Pa	998484-01		●																			10/04
0220	CONDENSATE TRAP	65105349		●	●				●		●											01/06	
0221	SENSORE HALL	65100561		●					●		●												
0300	**CHASSIS-FRONT CASE**																						
0303	RESTRICTOR (D=41)	995315			●																		
	RESTRICTOR (D=42)	998087		●					●		●												
	RESTRICTOR (D= 45)	998113		●					●		●												
	RESTRICTOR (D=43)	999980			●																		
0304	FLUE (EXHAUST MANIFOLD / HEADER)	999561		●	●				●		●												
0306	PLUG (AIR INTAKE)	998595		●	●				●		●												
0310	SPRING (FASTENING)	570717		●	●	●	●	●	●	●	●												
0315	CABLE CLAMP	571562		●	●	●	●	●	●	●	●												
0320	GASKET (FLUE COLLAR)	998637		●	●				●		●												
0322	COVER (FLUE TEST POINT)	998565		●	●				●		●												
0323	GASKET (FLUE TEST POINT)	998636		●	●				●		●												
0324	PIPE (EXPANSION VESSEL)	65100681		●	●	●	●	●	●	●	●												
0325	GASKET 3/8	573521		●	●	●	●	●	●	●	●												
0327	EXPANSION VESSEL	998616		●	●	●	●	●	●	●	●												
0337	HYDRAULIC GROUP SUPPORT	65102551		●		●	●		●	●	●												
	HYDRAULIC BLOCK SUPPORT	65103327			●			●															
0338	BUSH (EXPANSION VESSEL)	998776		●	●	●	●	●	●	●	●												
0339	3/8 LOCK NUT	998581		●	●	●	●	●	●	●	●												
0340	GRANKASE (CONNECTORS COVER)	65103192		●	●	●	●	●	●	●	●												
0342	CASE PANEL (L.H. SIDE)	65101352		●	●				●														
	CASE PANEL (L.H. SIDE)	65101954									●												
	CASE PANEL (L.H. SIDE)	65102558				●				●													11/03
	CASE PANEL (L.H. SIDE)	65102558					●	●															
0344	PANEL (FRONT CASE)	995343		●	●	●	●	●	●	●	●												
0345	CASE PANEL (R.H. SIDE)	65101351		●	●				●														
	CASE PANEL (R.H. SIDE)	65101953									●												
	CASE PANEL (R.H. SIDE)	65102557				●	●	●		●													
0346	FRONT PANEL CROSSBAR	991944		●	●	●	●	●	●	●	●												
0400	**GAS SECTION**																						
0401	GAS VALVE (SIT 845 SIGMA)	65100516		●	●	●	●	●	●	●	●												
0402	VALVE GAS DIAPHRAGM (D=5.7)	65101461	NG						●	●													
	VALVE GAS DIAPHRAGM (D=5.9)	65101955	NG								●												
	DIAPHRAGM D=4.7	65102251	NG			●	●	●															
	VALVE GAS DIAPHRAGM (D=5.4)	995480	NG		●																		
	VALVE GAS DIAPHRAGM D=5.3	995482	NG	●																			
0404	EARTH CABLE (VALVE)	65100704		●	●	●	●	●	●	●	●												
0405	GASKET (SPARK GENERATOR)	574279		●	●	●	●	●	●	●	●												
0406	GASKET 3/4	573520		●	●	●	●	●	●	●	●												
0407	COMPENSATION TUBE	573576		●					●		●												
0408	RIVET	573325		●	●				●		●												
0418	GAS PIPE	65102553		●	●	●	●	●	●	●	●												
0444	SPARK GENERATOR (KIT)	65100514		●	●	●	●	●	●	●	●												

500

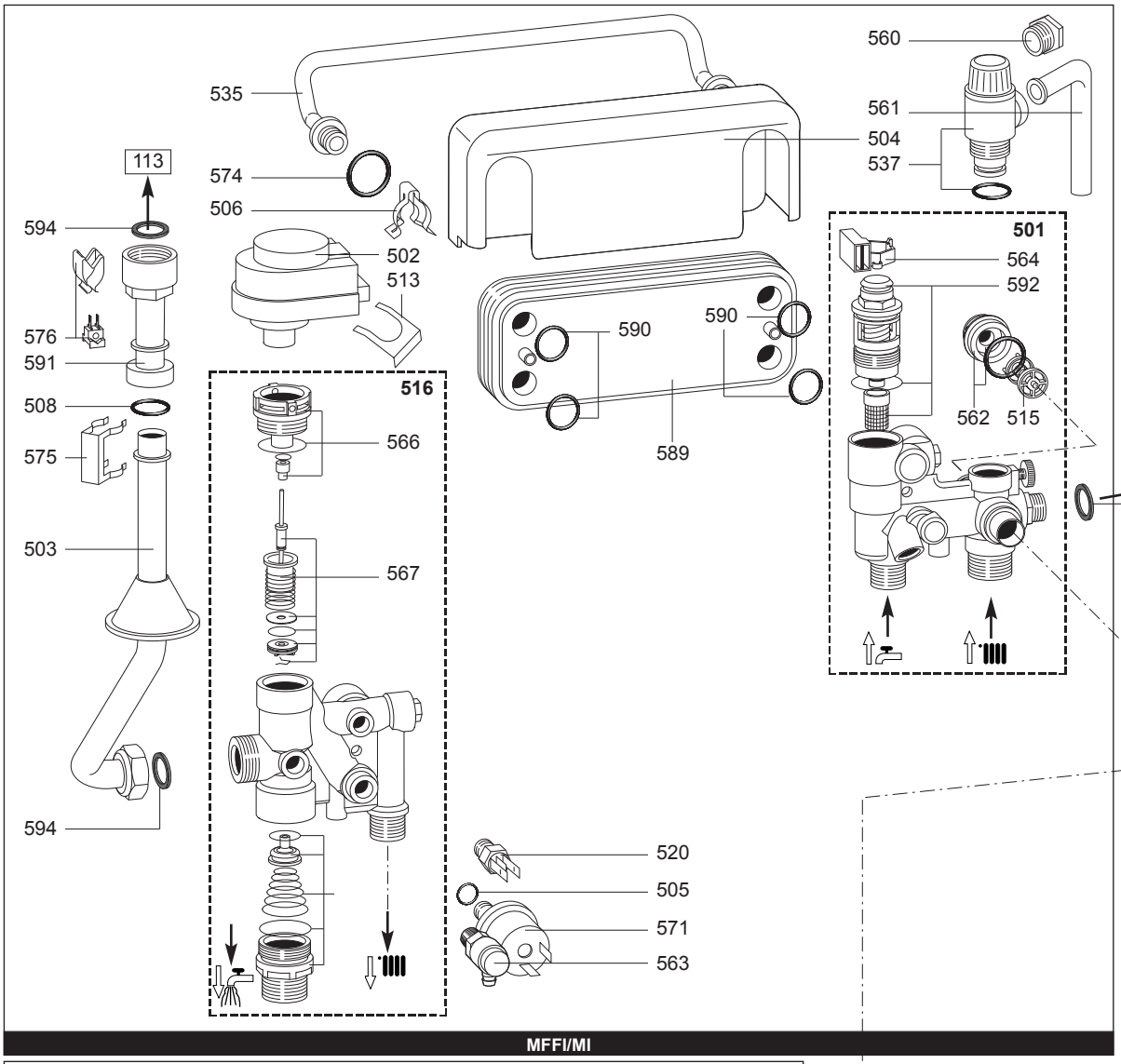

MFFI/MI

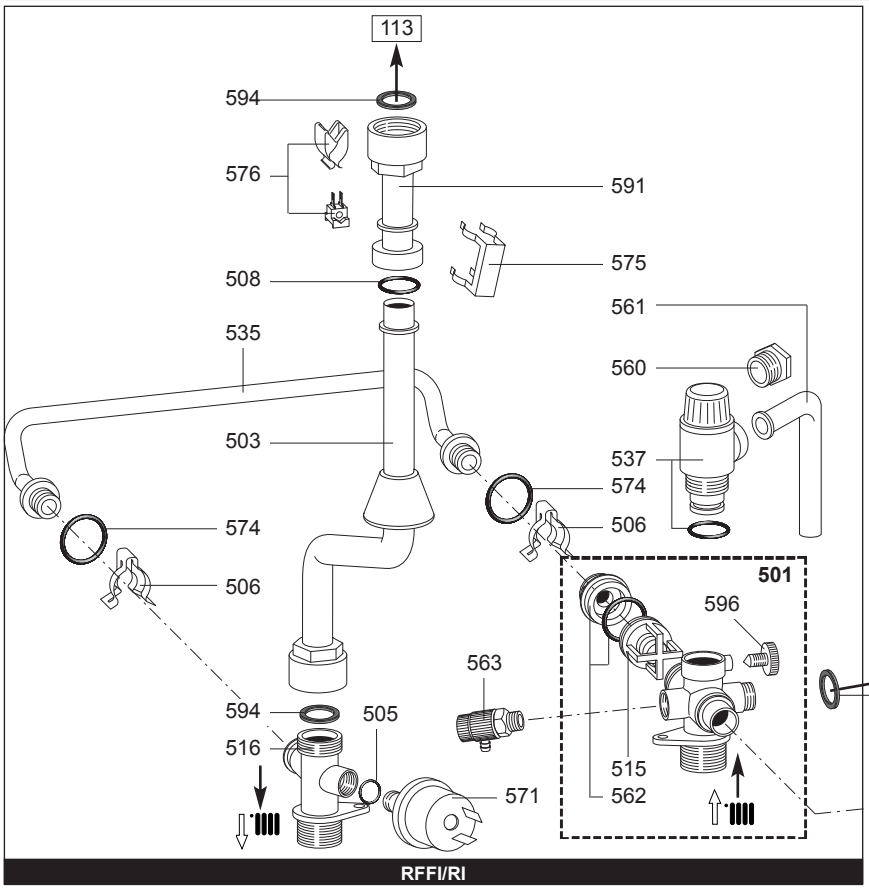

RFFI/RI

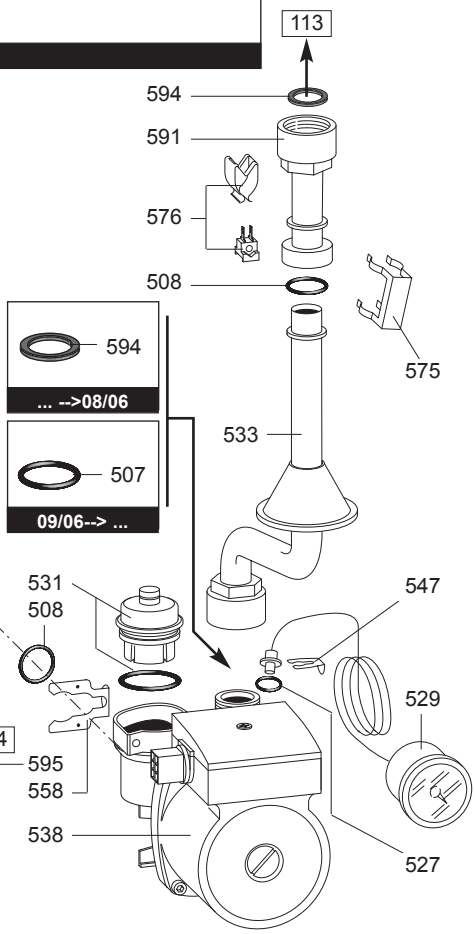

R8220391

	Description	Manf. Pt. N	Type	1 MICROG. PLUS 24 MFFI	2 MICROG. PLUS 24 RFFI	3 MICROG. PLUS 24 MI	4 MICROG. PLUS 24 MI VMC	5 MICROG. PLUS 24 RI	6 MICROG. PLUS 28 MFFI	7 MICROG. PLUS 28 MI	8 MICROG. PLUS 31 MFFI	9	10	11	12	13	14	15	16	17	18	31	
0500	**WATER SECTION ASSY**																						
0501	RETURN GROUP	65101257							●	●	●												
	RETURN GROUP	65101427		●		●	●																
	RETURN GROUP	65103425			●			●															
0502	MOTOR (3-WAY VALVE)	997147		●		●	●		●	●	●												
0503	DELIVERY PIPE	65100682		●					●		●												
	DELIVERY PIPE	65101424				●	●			●													
	DELIVERY PIPE	65103427			●																		
	DELIVERY PIPE	65103428						●															
0504	COVER INSULATION	65100706		●		●	●		●	●	●												
0505	GASKET 1/4	569390		●	●	●	●	●	●	●	●												
0506	SPRING (BY-PASS PIPE)	998064		●	●	●	●	●	●	●	●												
0507	O-RING	999325		●		●			●	●	●											09/06	
0508	O-RING	998424		●	●	●	●	●	●	●	●												
0513	FIXING CLIP (MOTOR)	997077		●		●	●		●	●	●												
0515	CENTRAL HEATING BY-PASS KIT	65100776							●	●	●												
	BY-PASS	65103163			●			●															
	CENTRAL HEATING BY-PASS KIT	998490		●		●	●																
0516	FLOW GROUP	65103139			●			●															
	PRESSURE GAUGE VALVE GROUP	65105063		●		●	●		●	●	●												
0520	TEMPERATURE PROBE	998458		●		●	●		●	●	●												
0527	O-RING	998517		●	●	●	●	●	●	●	●												
0529	PRESSURE GAUGE	65100695		●	●	●	●	●	●	●	●												
0531	AUTO AIR VENT + O-RING	995367		●	●	●	●	●	●	●	●												
0533	PIPE (C.H.RETURN)	65100683		●					●		●												08/06
	PIPE (C.H. RETURN)	65101272		●	●				●		●											09/06	
	PIPE (C.H. RETURN)	65101425				●	●			●													08/06
	PIPE (C.H. RETURN)	65102192				●	●	●		●												09/06	
0535	BY-PASS PIPE	65100684		●	●	●	●	●	●	●	●												
0537	SAFETY VALVE	65103222		●	●	●	●	●	●	●	●												06/05
	SAFETY VALVE	65103222			●			●															
0538	PUMP	65102250							●	●	●												08/06
	PUMP	65102322		●		●	●																08/06
	PUMP	65103096			●			●															
	PUMP	65104558		●		●	●															09/06	
	PUMP	65104559							●	●	●											09/06	
0547	U-CLIP	571548		●	●	●	●	●	●	●	●											09/06	
	CLIP	65100680		●		●	●		●	●	●												08/06
0558	CLIP	65102587		●		●	●		●	●	●												08/06
	CLIP	65102797		●	●	●	●	●	●	●	●											09/06	
0560	NUT	998567		●	●	●	●	●	●	●	●												
0561	PIPE - PRESSURE RELIEF VALVE	573176		●	●	●	●	●	●	●	●												
0562	UNION	65100869		●		●	●		●	●	●												
	UNION BY-PASS + O-RING	65103162			●			●															
0563	DRAIN VALVE	573727		●	●	●	●	●	●	●	●												
0564	FLOW DETECTION KIT WITH MAGNET	65100540		●		●	●		●	●	●												
0566	HEATING ACTUATOR BUSH	998974		●		●	●		●	●	●												
0567	3-WAY SPRING KIT (D.H.W.)	998975		●		●	●		●	●	●												
0568	3-WAY SPRING KIT (C.H.)	65105065		●		●	●		●	●	●												
0571	LOW WATER PRESSURE SWITCH	995903		●	●	●	●	●	●	●	●												
0574	O-RING	998077		●	●	●	●	●	●	●	●												
0575	CLIP	61010609		●	●	●	●	●	●	●	●												
0576	TEMPERATURE PROBE + CLIP	990686		●	●	●	●	●	●	●	●												
0589	DHW HEAT EXCHANGER	998483		●		●	●		●	●	●												
0590	O-RING 4075 3,53 X 18,64	573825		●		●	●		●	●	●												
0591	CONNECTOR PIPE	65101423				●	●	●		●													
0592	3-WAY SPRING KIT (D.H.W.)	65100541		●		●	●		●	●	●												
0594	GASKET 3/4	573520		●	●	●	●	●	●	●	●												
0595	GASKET 3/8	573521		●	●	●	●	●	●	●	●												
0596	FIXING SCREW	65103161			●			●															

600

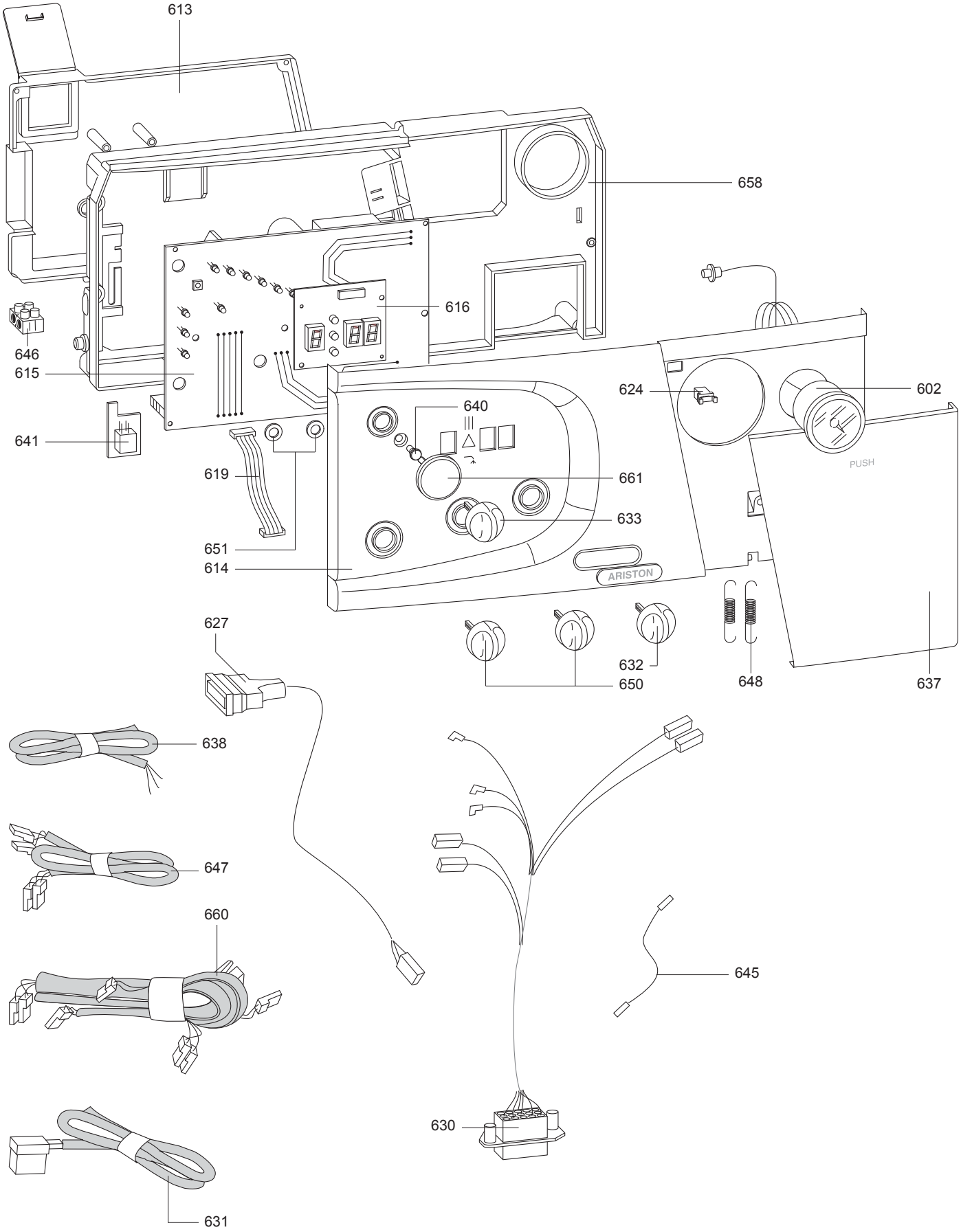

R8220392

	Description	Manf. Pt. N	Type	1 MICROG. PLUS 24 MFFI	2 MICROG. PLUS 24 RFFI	3 MICROG. PLUS 24 MI	4 MICROG. PLUS 24 MI VMC	5 MICROG. PLUS 24 RI	6 MICROG. PLUS 28 MFFI	7 MICROG. PLUS 28 MI	8 MICROG. PLUS 31 MFFI	9	10	11	12	13	14	15	16	17	18	31	
0600	**ELECTRICAL BOX**																						
0602	PRESSURE GAUGE	65100695		●	●	●	●	●	●	●	●												
0613	CONTROL PANEL COVER	65103432		●	●	●	●	●	●	●	●												
0614	CONTROL PANEL	65100728		●	●	●	●	●	●	●	●												
0615	P.C.B. (CMP3-MCU HS MI/MFFI 3S)	65101732		●		●	●		●	●	●												
	P.C.B. (CMP3-MCU HS MI/MFFI/R HE)	65103422			●			●															
0616	P.C.B. (CMP3-DISPLAY)	65100709		●	●	●	●	●	●	●	●												
0619	DISPLAY CABLE	65100697		●	●	●	●	●	●	●	●												
0624	PUSH (CASE DOOR)	65100676		●	●	●	●	●	●	●	●												
0627	CABLE (MOTOR)	65103438			●			●															
	CABLE (MOTOR)	65104570		●		●	●		●	●	●												
0630	CABLE (FAN/AIR PRESSURE SWITCH)	65100702		●					●		●												
	CABLE (FAN/AIR PRESSURE SWITCH)	65101273			●																		
0631	CABLE (P.C.B./PUMP)	65100703		●		●	●		●	●	●												
	CABLE (P.C.B./PUMP)	65101353			●			●															
0632	KNOB (ON-OFF)	65100690		●	●	●	●	●	●	●	●												
0633	KNOB	65100689		●	●	●	●	●	●	●	●												
0637	CONTROL PANEL COVER	65100686		●	●	●	●	●	●	●	●												
0638	CABLE (POWER SUPPLY)	65100699		●	●	●	●	●	●	●	●												
0640	BUTTON (RESET)	65100688		●	●	●	●	●	●	●	●												
0641	MODULE KIT (EEPROM CMP3)	65101368		●		●	●		●	●	●												
	MODULE KIT (EEPROM CMP3)	65103444			●			●															
0645	CABLE (EARTH)	65100705		●	●	●	●	●	●	●	●												
0646	CONNECTOR BLOCK	571787		●	●	●	●	●	●	●	●												
0647	LOW VOLTAGE CABLE	65100698		●					●		●												
	LOW VOLTAGE WIRING	65103439			●																		
0648	FIXING SPRING (PANEL)	65100678		●	●	●	●	●	●	●	●												
0650	KNOB	65100687		●	●	●	●	●	●	●	●												
0651	NYLON BUSH (10MM)	569711		●	●	●	●	●	●	●	●												
0658	CONTROL PANEL	65105219		●	●	●	●	●	●	●	●												
0660	CABLE (FAN POWER SUPPLY)	65100696		●					●		●												
	CONTROL PANEL WIRING	65101293				●	●			●													
	CONTROL PANEL WIRING	65103423			●																		
	CONTROL PANEL WIRING	65103424						●															
0661	KNOB COVER	65103426			●			●															

900

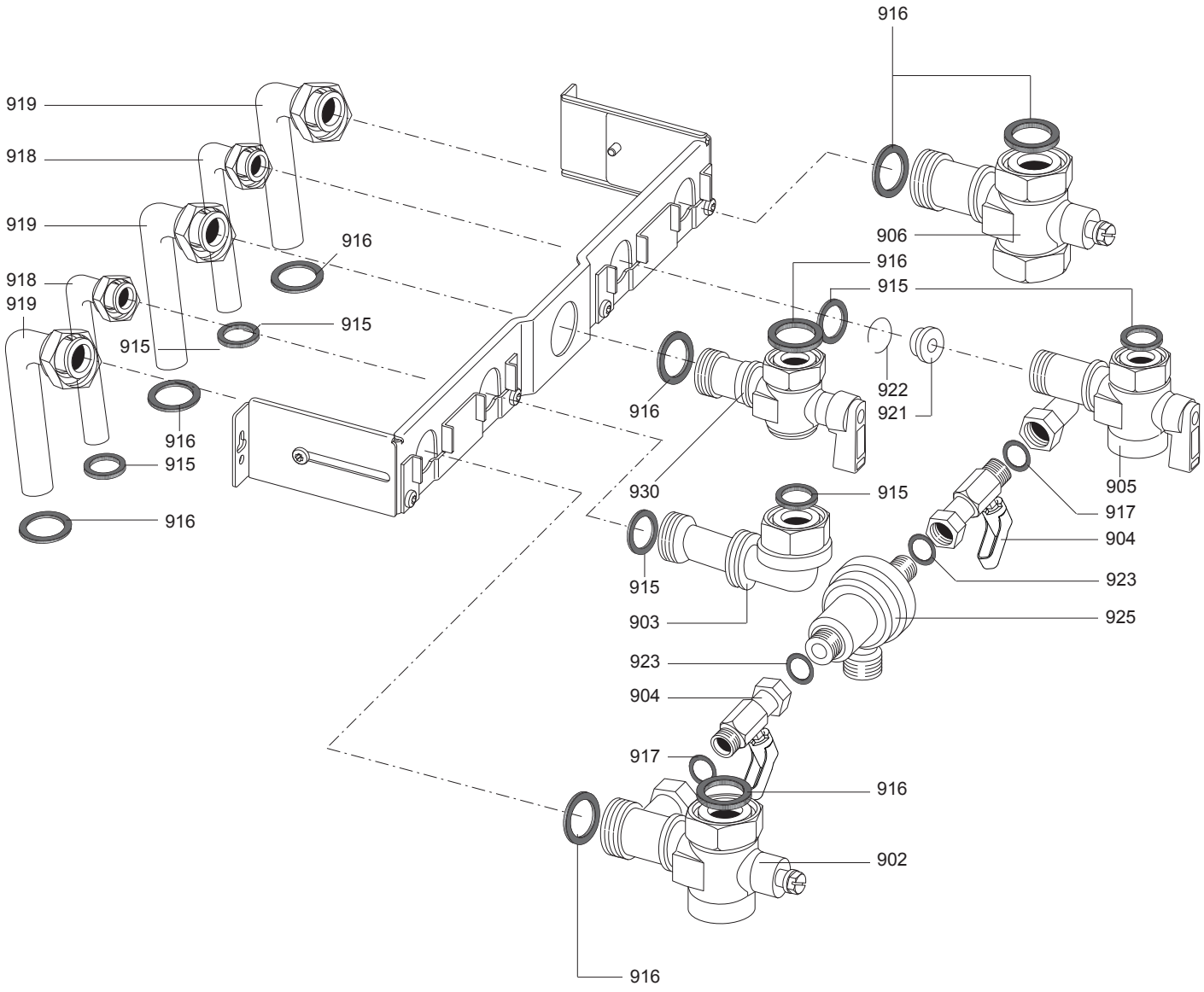

5000

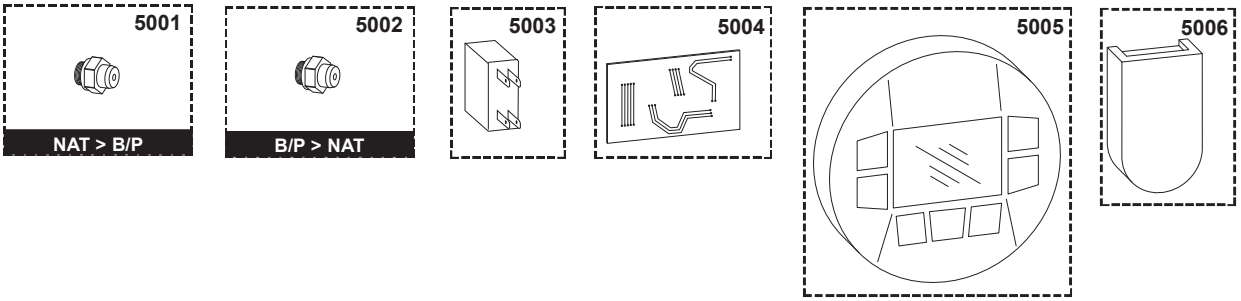

R8220393

	Description	Manf. Pt. N	Type	1 MICROG. PLUS 24 MFFI	2 MICROG. PLUS 24 RFFI	3 MICROG. PLUS 24 MI	4 MICROG. PLUS 24 MI VMC	5 MICROG. PLUS 24 RI	6 MICROG. PLUS 28 MFFI	7 MICROG. PLUS 28 MI	8 MICROG. PLUS 31 MFFI	9	10	11	12	13	14	15	16	17	18	31	
0900	**COCKS & COPPER PLATE**																						
0902	ISOLATING VALVE 3/4 (C.H. FLOW)	995486		●	●	●	●	●	●	●	●												
0903	UNION 1/2 (D.H.W. OUTLET)	998406		●		●	●		●	●	●												
0904	TAP (3/8”-1/4”)	65104047		●	●	●	●	●	●	●	●												
0905	VALVE (1/2)	65102383		●		●	●		●	●	●												
0906	ISOLATING VALVE (3/4 RETURN)	999582		●	●	●	●	●	●	●	●												
0915	GASKET 1/2	573528		●		●	●		●	●	●												
0916	GASKET 3/4	573520		●	●	●	●	●	●	●	●												
0917	GASKET 3/8	573521		●	●	●	●	●	●	●	●												
0918	PIPE (1/2”)	65104049		●		●	●		●	●	●												
0919	PIPE (3/4”)	65104048		●	●	●	●	●	●	●	●												
0921	10 L FLOW LIMITING DEVICE	999511		●		●	●		●	●	●												
	12 L FLOW LIMITING DEVICE	999512		●		●	●		●	●	●												
0922	RETAINGING RING	999477		●		●	●		●	●	●												
0923	GASKET 1/4	569390		●	●	●	●	●	●	●	●												
0925	DISCONNECTING DEVICE	65102382		●	●	●	●	●	●	●	●												
0930	VALVE (3/4)	65104050		●	●	●	●	●	●	●	●												
5000	**ACCESSORIES**																						
5001	BURNER JET FULL KIT (LPG)	569282	LG	●	●																		
	BURNER JET FULL KIT (LPG)	65100739	LG								●												
	BURNER JET FULL KIT	998717	LG			●	●	●	●	●													
5002	BURNER JET FULL KIT (NG)	569281	NG	●	●																		
	BURNER JET FULL KIT (NG)	65100771	NG								●												
	BURNER JET FULL KIT	998716	NG			●	●	●	●	●													
5003	ZONE VALVE RELAY (KIT)	992092		●	●	●	●	●	●	●	●												
5004	REMOTE CONTROL INTERFACE	996041		●	●	●	●	●	●	●	●												
5005	REMOTE CONTROL	996055		●	●	●	●	●	●	●	●												
5006	OUTSIDE HEAT SENSOR	65109110		●	●	●	●	●	●	●	●												

LIST OF THE ABBREVATIONS

HW	:	Hot water.
CW	:	Cold water.
C	:	Ceramic resistance (normal heating).
Ca	:	Ceramic resistance (accelerated heating)
TP	:	Immersion heater.
1F	:	With fittings.
2F	:	Without fittings.
3F	:	With fittings and another outlet connection.
AMI	:	With mixing valve.
SMI	:	Without mixing valve.
PUISS	:	Power of th appliance.
PN	:	Appliance with normal pression.
LP	:	Appliance with low pression.
PV	:	Appliance with variable power.
PF	:	Appliance with fixed power.

IDENTIFICATION PLATE

SERIAL NUMBER

10 Characters : 04 05 125 011

- 011 → Sequencial number
- 125 → Manufacturing day
- 05 → Year of manufacture

11 Characters : 1 95 065004 - 31

- 1 → Month of manucfacture : from 1 to 9 ➟ Jan. to Sep., O ➟ Oct., N ➟ Nov., D ➟ Dec.
- 31 → Technical number of the appliance
- 065004 → Sequencial number
- 95 → Year of manufacture

19 Characters : 08 05 0013199 900640031

- 08 → Year of manufacture
- 05 → Month of manucfacture
- 900640031 → Product reference
- 0013199 → Sequencial number

20 Characters : 3675007 XX 2 07 070 00315

- 3675007 → Product reference
- 2 → Millenium of manufacture
- 00315 → Sequencial number
- 070 → Manufacturing day
- 07 → Year of manufacture

21 Characters : 3675007 XX 07 070 0000315

- 3675007 → Product reference
- 07 → Year of manufacture
- 0000315 → Sequencial number
- 070 → Manufacturing day

The indications mentionned on the prices, commercial or technical literature and the scheme are written for your guidance and are available at a given time. The CONSTRUCTOR retains the power to modify the presentation, the form, the size, the conception or the material of the products.